ATX-ARS1-W880

ATX Industrial Motherboard Supporting Intel® Core Ultra Processors (Series 2), Socket LGA1581

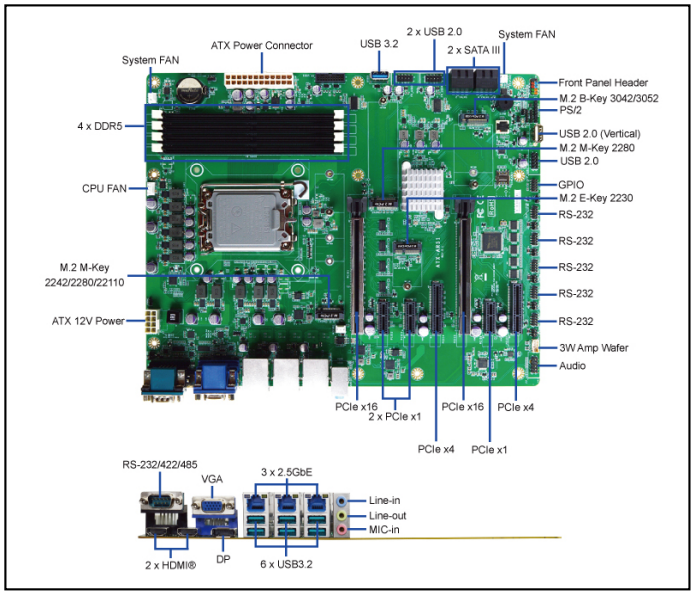

Features

- **Powered by Intel® Core™ Ultra processors (Arrow Lake-S) with W880 chipset**
- **High-Speed Memory Support: 4 x DDR5 6400MT/s Dual Channel U-DIMM, up to 256GB ECC supported**
- **Triple 2.5GbE Networking: 3 x Intel® 2.5GbE Ethernet ports**
- **Versatile Storage Options: 4 x SATA III with RAID 0/1/5/10, 2 x M.2 M-key (NVMe)**
- **Multiple Expansion Slots: 1 x B-Key, 1x E-Key, 2 x PCIe Gen.5 x16, 2 x PCIe Gen.4 x4, 3 x PCIe Gen.3 x1**
- **Comprehensive Quad Display Support: 2 x 4K HDMI 2.1 TMDS, 1 x 4K DP, and VGA**
- **Rich Connectivity: 9 x USB 3.2, 7 x USB 2.0, 6 x COM , 1 x 8 bits GPIO**
- **Enhanced Security: Onboard TPM 2.0 (optional)**

Packing List

PART NUMBER	DESCRIPTION	QTY
ATX-ARS1	ATX-ARS1 MB	1
G01-COM-H2M22-1F	COM Port Cable, 22cm, Pitch 2.0	2
G01-SATA3-BL-1F	SATA Cable, 50cm	2
G01-PW4PS2S-322-1F	SATA Power Y cable, 5.0pitch for 32cm, 2.54pitch for 20cm	1
F04-MB-112-F	IO Shield	1
F01-SPBK-1F	Jumper	1

Specifications

SYSTEM	
MB FORM FACTOR	ATX
CPU	Intel® LGA1851 Socket, ProcessorArrow Lake-S (MAX. TDP 125W)
CHIPSET	Intel® W880
MEMORY	4 x DDR5 6400MT/s, Dual Channel CU-DIMM, up to 256GB ECC Supported
BIOS	UEFI
WAKE ON LAN	Yes
WATCHDOG TIMER	255 Levels
SECURITY	Intel® PTT (Integrated fTPM) TPM2.0 (dTPM, Optional)
RTC BATTERY	Lithium Battery
DIMENSION (W X D)	305.0 (W) x 244.0 (D) mm (12" x 9.6")
OS SUPPORT	Windows® 11 (64bit) Linux
POWER	
POWER REQUIREMENT	ATX Power Supply
POWER ON MODE	ATX (Default) Mode
CONNECTOR	Internal 24+8-pin ATX Header
DISPLAY	
GPU	Intel® Graphics
DP	1 x DP1.4a (Max Resolution: 4096 x 2160@60Hz)
HDMI®	2 x HDMI® 2.1 TMDS (Max Resolution:3840 x 2160@60Hz)
VGA	1 x VGA (Max Resolution: 1920 x 1080 @60Hz)
MULTIPLE DISPLAY	Support 4 Displays
AUDIO	
CODEC	Realtek codec
Line-in	1 x Audio Jack for Line-In
Line-out	1 x Audio Jack for Line-Out
MIC-in	1 x Audio Jack for MIC-In
AMPLIFIER	3W
LAN	
ETHERNET	1 x RJ45 for Intel® I226-LM 2.5GbE 2 x RJ45 for Intel® I226-V 2.5GbE
USB PORT	
USB	6 x USB 3.2 Gen 2 Internal Header for 2 x USB 3.2 Gen 1 Internal Header for 6 x USB 2.0 Internal USB Type A (Vertical) for 1 x USB 3.2 Gen.1x1 Internal USB Type A (Vertical) for 1 x USB 2.0
SERIAL PORT	
COM	1 x DB-9 for RS-232/422/485 Internal Header for 5 x RS-232
INTERNAL I/O	
GPIO	8-Bit
SMBUS	Yes
FAN	1 x CPU Fan Header (Smart Fan) 2 x System Fan Header
FRONT PANEL	HDD Active LED Power LED Power On/Off Reset
ADDITIONAL	1 x Chassis intrusion 1 x AT/ATX Mode Selection
STORAGE	
SATA	4 x SATA III
RAID	Intel® VMD RAID 0, 1 / SATA RAID 0, 1, 5, 10
EXPANSION	
M.2	1 x M-Key 2242/2260/2280/22110 (PCIe Gen.5 x4) support NVMe 1 x M-key 2242/2280 (PCIe Gen.4 x4) support NVMe 1 x E-Key 2230 (USB 2.0/PCIe Gen.3 x1) Support CNVio 1 x B-Key 3042/3052 (USB3.2 Gen.1/USB2.0 interface/PCIe Gen.3 x1) support 4G/5G Module
PCIe	2 x PCIe Gen.5 x16 slots (1x PCIe Gen.5x16 or 2 xPCIe Gen.5 x8) 2 x PCIe Gen.4 x4 3 x PCIe Gen.4 x1
SIM	1 x Nano SIM Card Slot
ENVIRONMENT & CERTIFICATION	
SHOCK	15G, 11ms duration
VIBRATION	1 Grms/ 5~ 500Hz/ Operation
OPERATING TEMPERATURE	-20°C ~ 60°C (-4°F ~ 140°F)
STORAGE TEMPERATURE	-20°C ~ 85°C (-4°F ~ 185°F)
OPERATING HUMIDITY	10 ~ 90% Relative Humidity, Non-condensing

Headquarter
support_team@jetway.com.tw
+886-2-89132711

USA
sales@jetwaycomputer.com
+1-510-857-0130

China
support_team@jetway.com.tw
+86-769-2101-8010

Note: All specifications are subject to change without notice.

ATX-ARS1-W880

Block Diagram

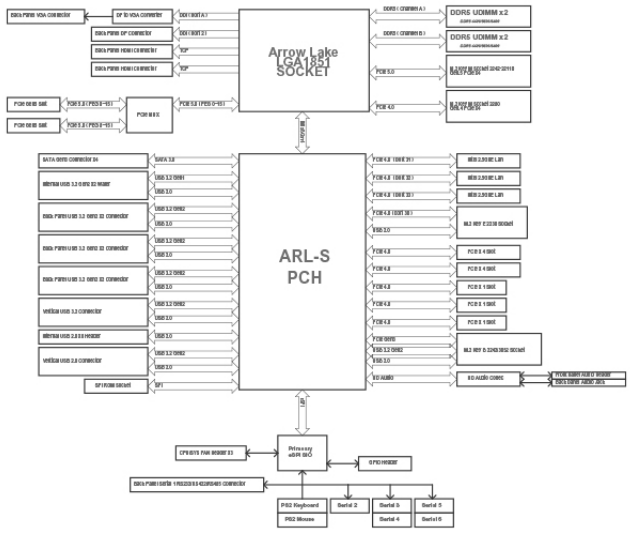

Dimension

Unit: mm

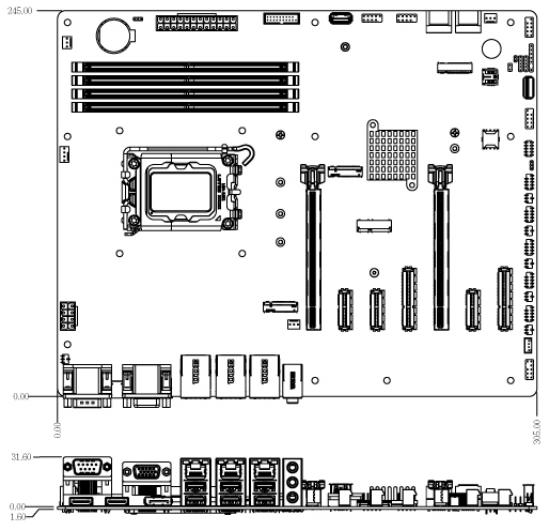

Ordering Information

PART NUMBER	ATX-ARS1-Q8700010	ATX-ARS1-Q8700210
CPU	Intel® Socket LGA1851 CPU	Intel® Socket LGA1851 CPU
SECURITY	Intel® PTT (fTPM)	TPM2.0 (dTPM)

Headquarter
support_team@jetway.com.tw
+886-2-89132711

USA
sales@jetwaycomputer.com
+1-510-857-0130

China
support_team@jetway.com.tw
+86-769-2101-8010

Note: All specifications are subject to change without notice.